Multi-Computing PC Card

Architectural Decisions

Part 2. Developing the architecture

Janicki Tomasz

Warsaw University of Technology 2011 February

Agenda

1. Part 1: Short reference
2. Main Considerations
3. Choice of FPGA
4. Architecture
5. Future ”TO DO” List

1. Part 1: MCPCC General Idea(s)

- To work as stand-alone board or as a PC card (PCI, PCIe,...)
- As low-cost as possible (thus not super-computing)
- To comunicate over (various) digital interfaces
- Functional-educational platform
  - HDL implementations
  - Embeded programs (systems) implementations
  - Digital Signal Processing
- Not one high speed controller but Cluster

General concept

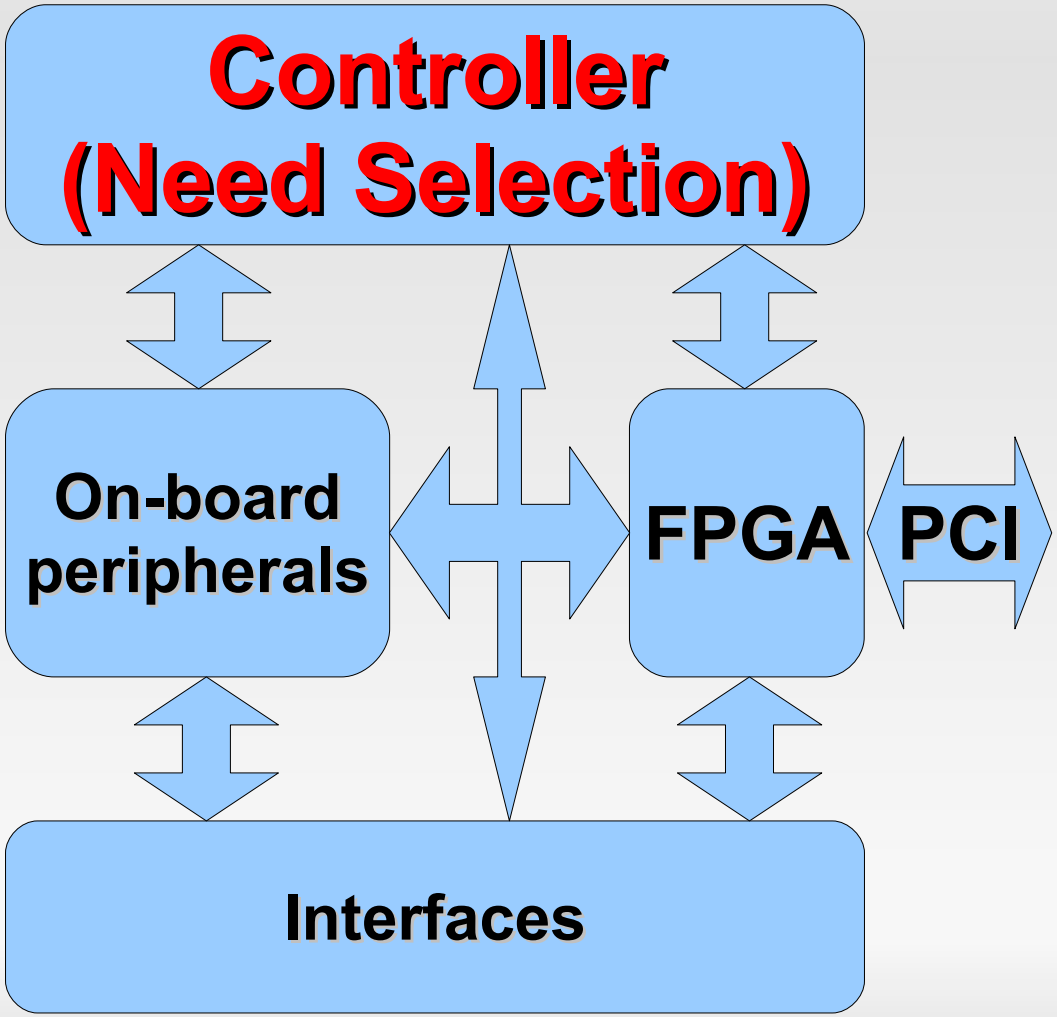

1. Part 1: OMAP – L138

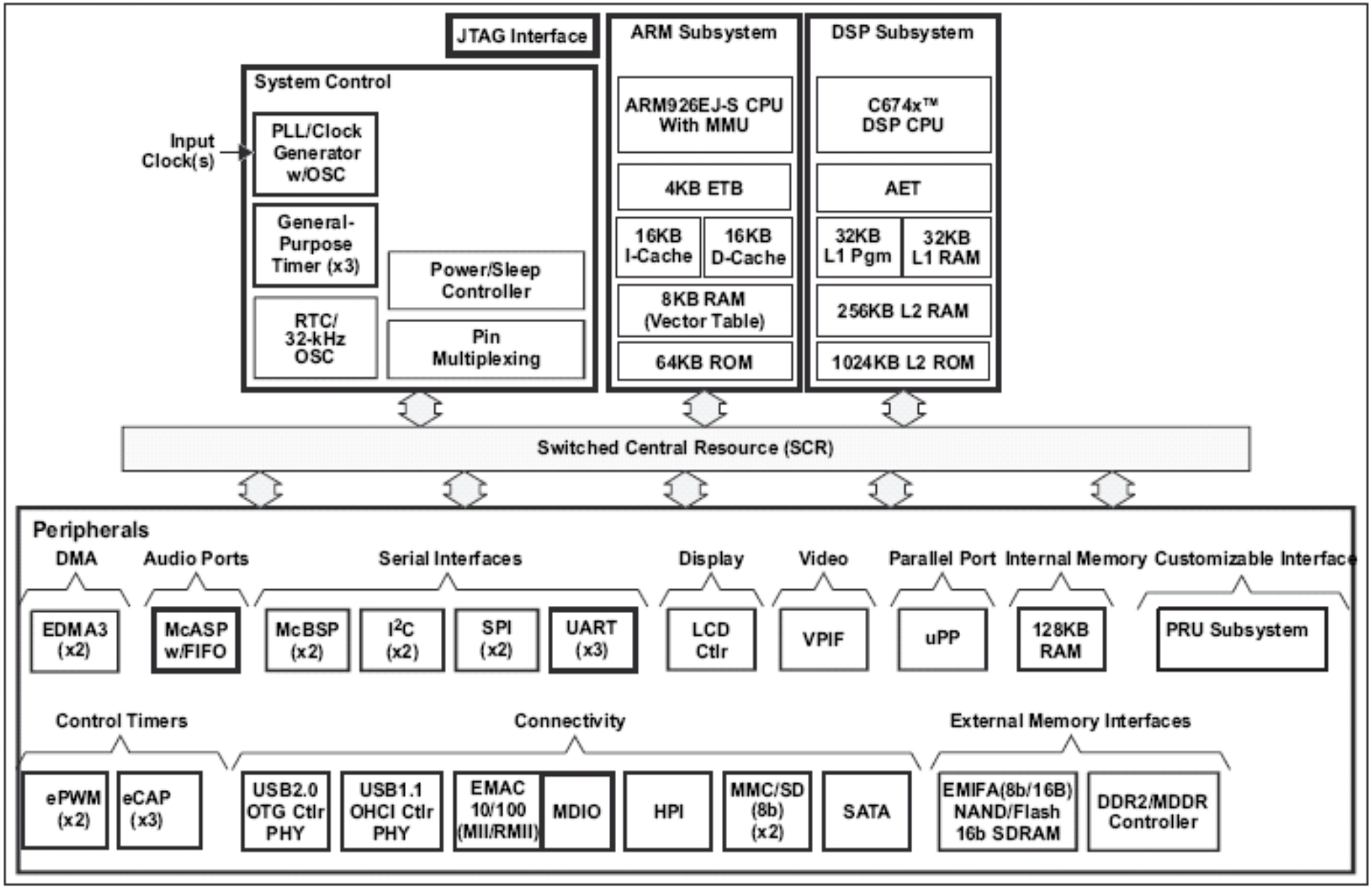

(1) Note: Not all peripherals are available at the same time due to multiplexing.

2. Main Considerations

- Two L138 on-board
  - **Direct connection**, shared memory cluster (ethernet, or bus)
- OMAP L138 Specific
  - L138 hardware support for various interfaces
  - L138 programmable pins
- uP's and FPGA sharing
  - Obtaining and confronting Timing Requirements for peripherals and interfaces
  - Choice of FPGA (with different device/timing models tpd's vary =~4-12 ns) :(

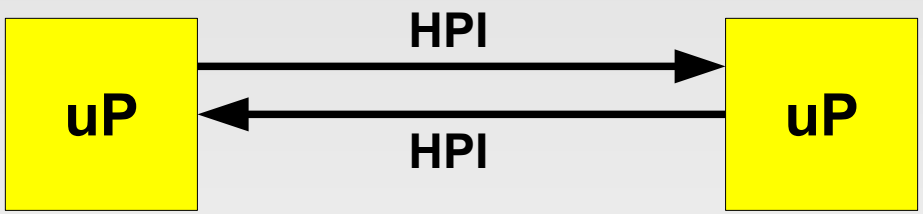

2. Main Considerations

- Two L138 on-board
  - Direct connection, **shared memory** cluster (ethernet, or bus)
- OMAP L138 Specific
  - L138 hardware support for various interfaces
  - L138 programmable pins
- uP's and FPGA sharing
  - Obtaining and confronting Timing Requirements for peripherals and interfaces
  - Choice of FPGA (with different device/timing models tpd's vary =~4-12 ns) :(

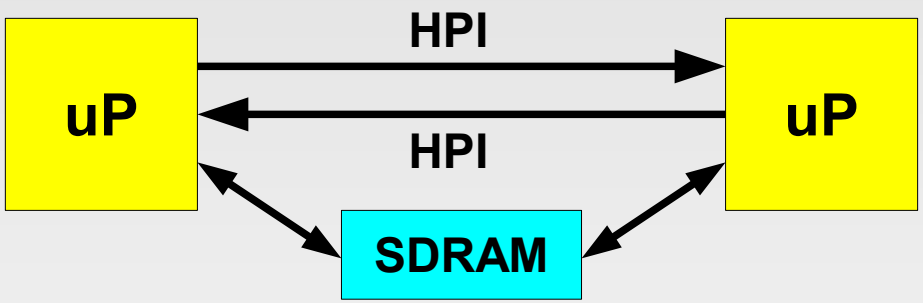

2. Main Considerations

- Two L138 on-board
  - Direct connection, shared memory **cluster** (**ethernet** or **bus**)
- OMAP L138 Specific
  - L138 hardware support for various interfaces
  - L138 programmable pins
- uP's and FPGA sharing
  - Obtaining and confronting Timing Requirements for peripherals and interfaces
  - Choice of FPGA (with different device/timing models tpd's vary =~4-12 ns) :(

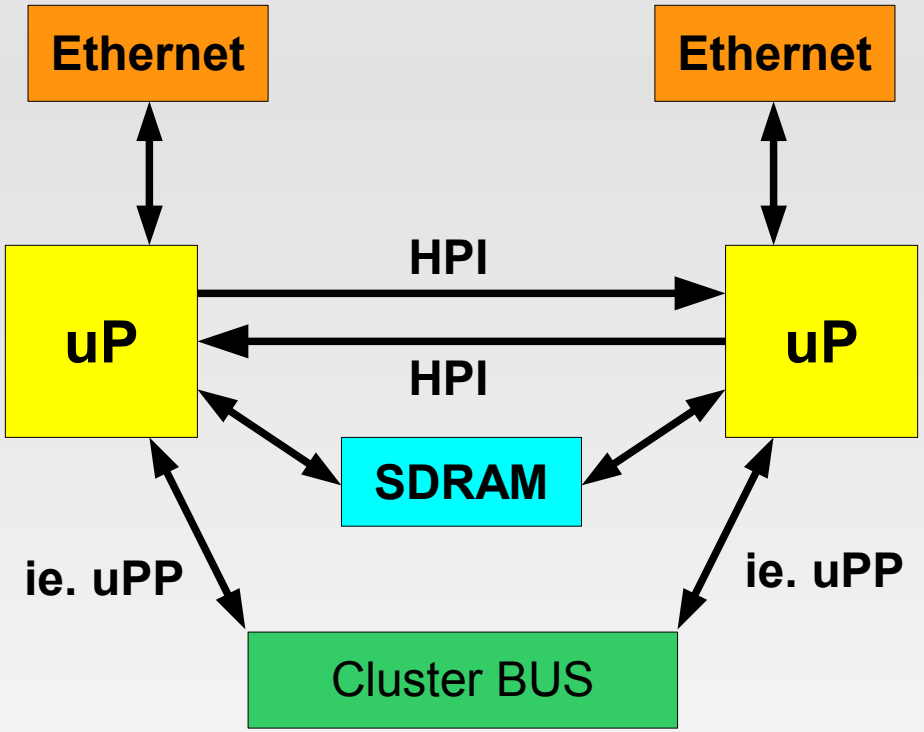

2. Main Considerations

- Two L138 on-board
  - Direct connection, shared memory cluster (ethernet or bus)
- OMAP L138 Specific
  - L138 **hardware support** for various interfaces
  - L138 **programmable pins**
- uP's and FPGA sharing
  - Obtaining and confronting Timing Requirements for peripherals and interfaces
  - Choice of FPGA (with different device/timing models tpd's vary =~4-12 ns) :(

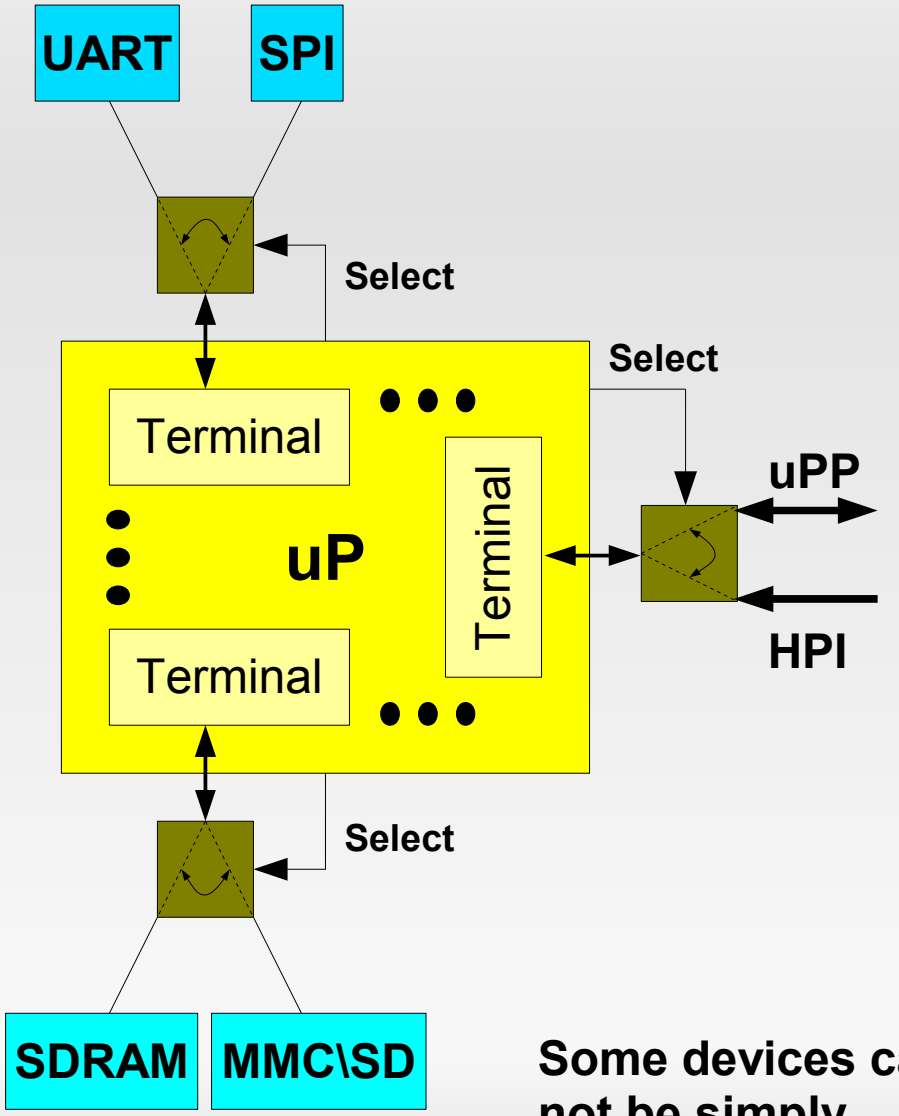

Some devices can not be simply disconnected !!!

2. Main Considerations

- Two L138 on-board
  - Direct connection, shared memory cluster (ethernet or bus)
- FPGA acting as crossbar
  - L138 **hardware support** for various interfaces
  - L138 **programmable pins**
- uP's and FPGA sharing
  - Obtaining and confronting Timing Requirements for peripherals and interfaces
  - Choice of FPGA (with different device/timing models tpd's vary =~4-12 ns) :(

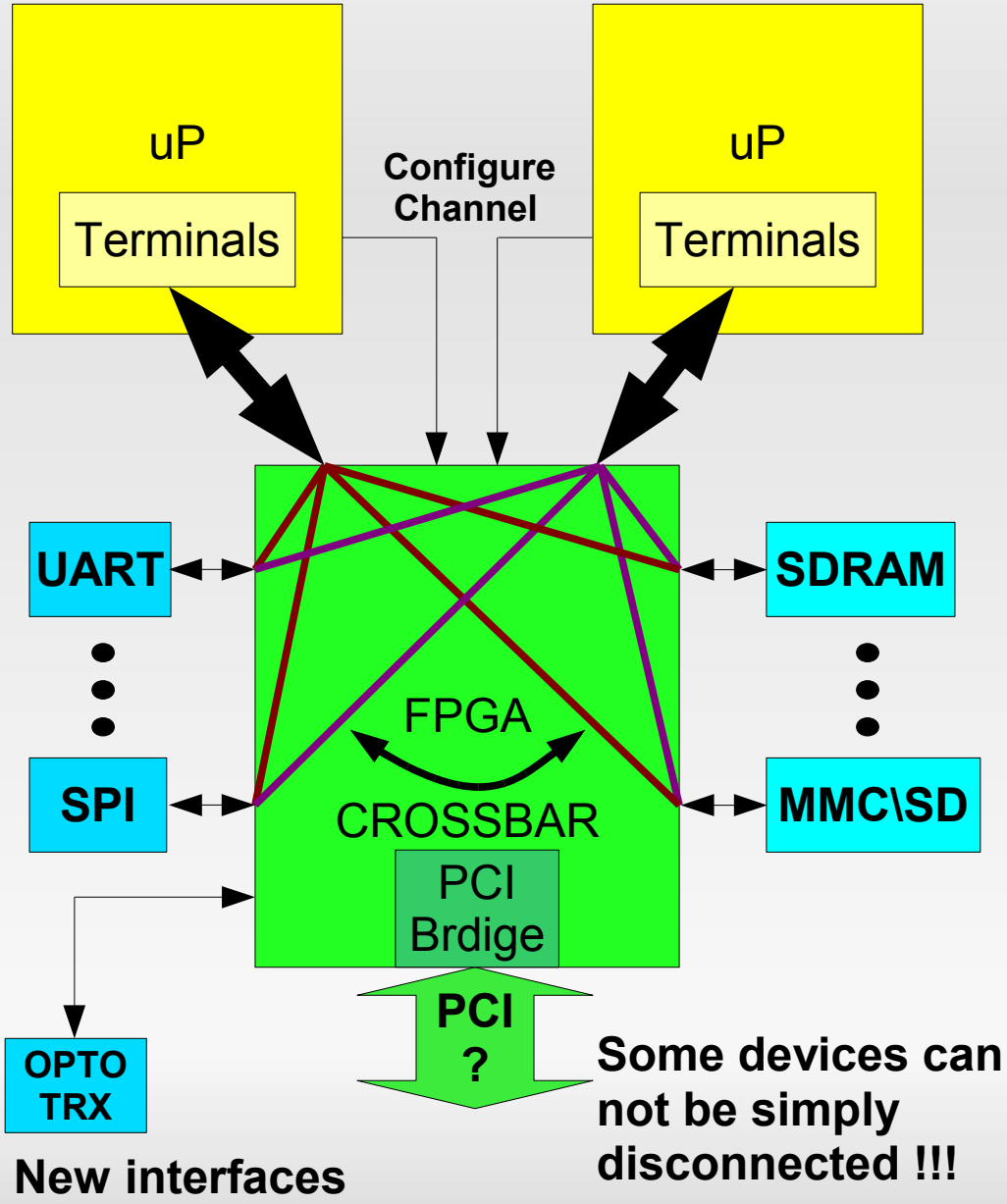

2. Main Considerations

- Two L138 on-board
  - Direct connection, shared memory cluster (ethernet or bus)
- FPGA acting as controllers
  - L138 hardware support for various interfaces
  - L138 programmable pins
- uP's and FPGA sharing
  - Obtaining and confronting Timing Requirements for peripherals and interfaces
  - Choice of FPGA (with different device/timing models tpd's vary =**~4-12 ns**) :(

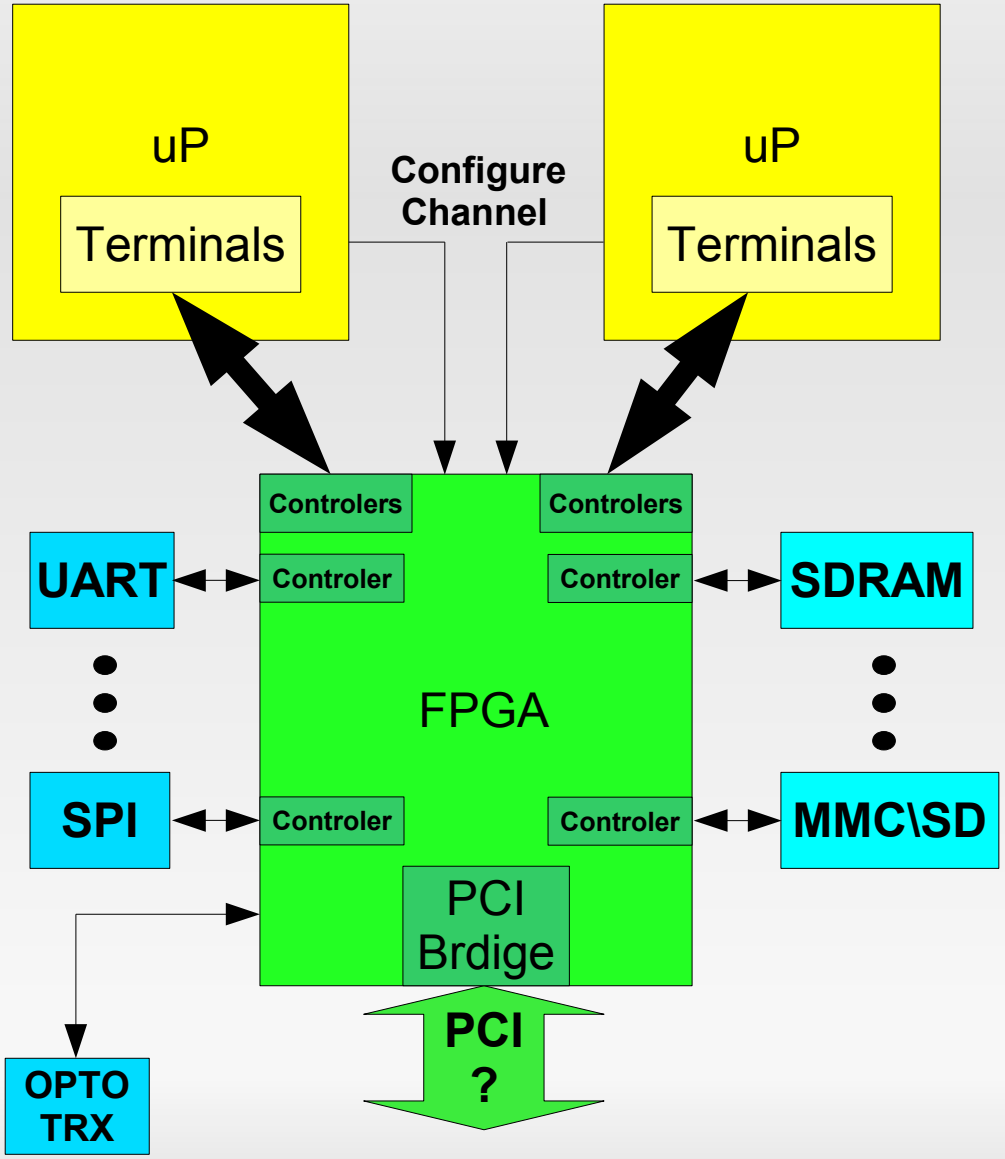

New interfaces

3. Choice of FPGA

Full potential

- ✗ To fully pass OMAP interfaces → ~ 320 IO's
- ✗ To implement all interfaces → ~ 320 IO's
- ✗ Additional useful (ie. OPTO) interfaces → ???
- ✗ To implement PCI → ~ 100 IO's
- ✗ Big FPGA's → Big Price
- ✗ Free editions of softwares doesn't support big FPGA's

Multiprocessing potential

- ✔ More sharing
- ✔ Limit to the interfaces useful from processing and multiprocessing side of view
- ✔ Do not pass every interface via FPGA
- ✔ Limit to FPGA's supported by free software
- ✔ Limit to rather Low–Cost FPGA's

3. Choice of FPGA

- A lot of I/O standards
  - including compatible with OMAP L138
- 622 user I/O
  - 8 banks
- Low-Cost
  - ~1k PLN @ Farnell
- PCI / PCI X
  - 33/66/133 MHz
- PCIe 1x
  - with external PHY
  - PCIe compilant (says PCI-SIG)
- DDR/DDR2
  - up to 167 Mhz

4. Architecture

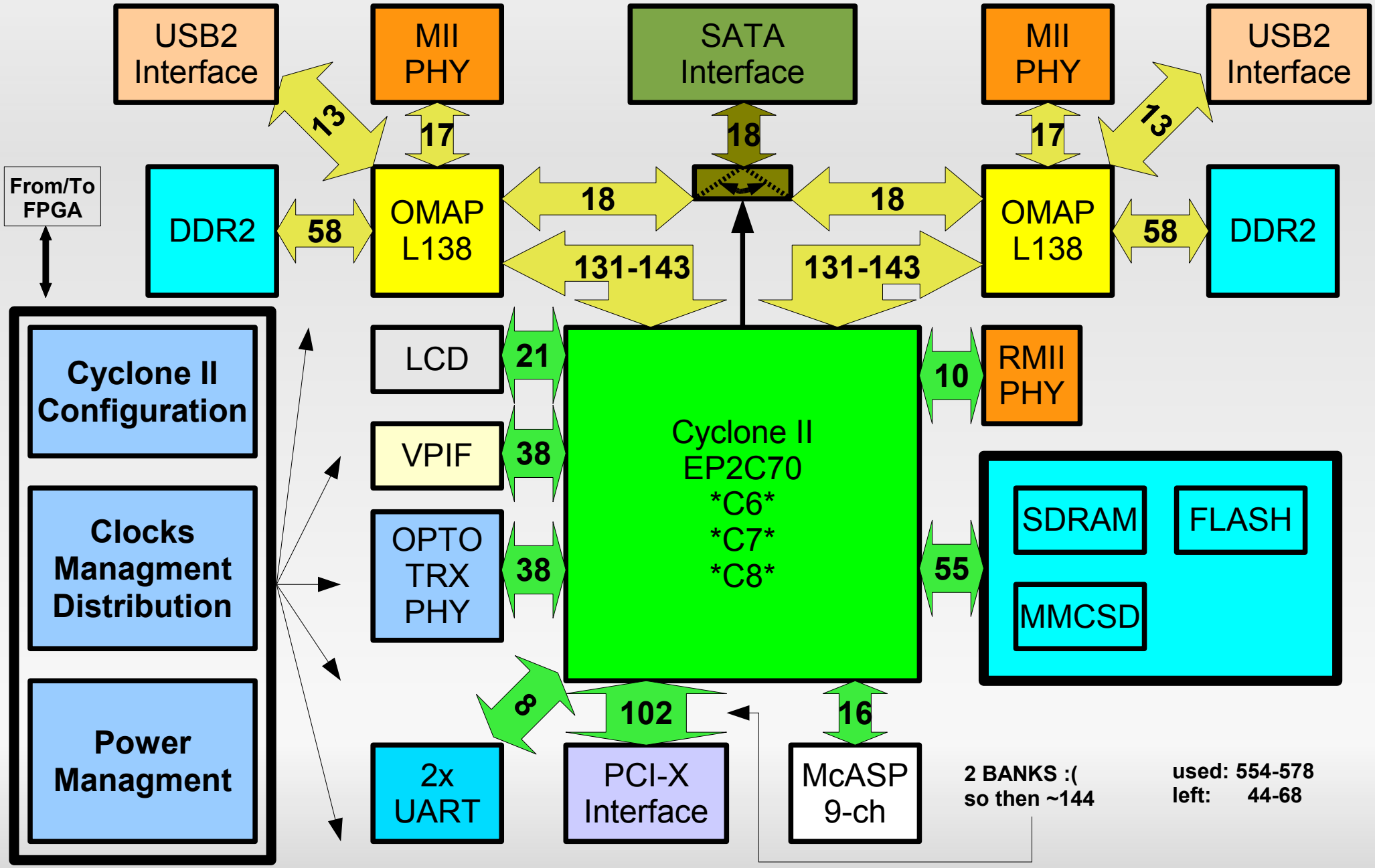

5. Future ”TO DO” List

- To do pre-layout simulations using IBIS models
  - to save myself from eventual total failure
- To buy/recive the most importand devices
  - Cyclone and OMAPs
- To finally do proper schematics and layout
  - including post layout simulations
- Produce, program and test the design
  - (not so) far future

Multi-Computing PC Card

Thank you for listening

tomasz.janicki.tj@gmail.com

Questions please